LOW POWER 1-75W
DC-DC CONVERTER
Packaging Information

Contents

1. Package Table 2
2. Package SIP 4 3
   2-1. 0.46x0.24x0.40 Inch 3
   2-2. 0.46x0.30x0.40 Inch 3
3. Package SIP7 4
   3-1. 0.77x0.24x0.40 Inch 4
   3-2. 0.77x0.28x0.40 Inch 4
4. Package SIP8 5
5. Package DIP16 5
   5-1. 0.95x0.54x0.39 Inch 5
6. Package DIP24 6
   6-1. 1.25x0.80x0.40 Inch 6
   6-2. 1.25x0.80x0.50 Inch 6
7. Package 1″x1″ 7
8. Package 2″x1″ 7
9. Package 2.05″x1.2″ 8
10. Package 2″x1.6″ 8
11. Package 2″x2″ 9
12. Package 2.56″x3″ 9
13. Package SMD 10
   13-1. 0.54x0.36x0.29 Inch 10
   13-2. 0.64x0.36x0.29 Inch 10
   13-3. 1.00x1.00x0.36 Inch 11
14. Package SMD24 11
   14-1. 1.25x0.80x0.45 & 1.25x0.80x0.41 Inch 11
   14-2. 1.25x0.80x0.55 Inch 12
15. Package Enclosed Chassis Mount/DIN Rail 13
   15-1. 4.45x2.33x0.85 & 4.45x2.33x1.43 Inch 13
   15-2. 4.00x2.14x0.80 & 4.00x2.14x1.38 Inch 13
   15-3. 5.63x2.56x0.87 & 5.63x2.56x1.54 Inch 14
   15-4. 5.63x2.56x1.42 & 5.63x2.56x2.05 Inch 14
16. Package Chassis Mount/DIN Rail 15
   3.04x1.48x1.20 & 3.04x1.48x1.71 Inch 15
17. Package SIP3 15
   17-1. 0.48x0.34x0.69 Inch 15

CINCON Electronics Co. Ltd.
Add: 14F, No. 306, Sec.4, Hsin Yi Rd., Taipei, Taiwan
Tel: 886-2-27086210
Fax: 886-2-27029852
E-mail: sales@cincon.com
Web: www.cincon.com

LOW POWER 1-75W
DC-DC CONVERTER
Packaging Information

1. Package Table

Package	Product Series
0.46”x0.24”x0.40” (SIP4)	EC1TA0XN/1XN
0.46”x0.30”x0.40” (SIP4)	EC1TA2XN
0.77”x0.24”x0.40” (SIP7)	EC1SA0XN/1XN
0.77”x0.28”x0.40” (SIP7)	EC1SA2XN/2SAN/2SANH
0.86”x0.36”x0.44” (SIP8)	EC2SA/3SA/3SAW/4SAW
0.87”x0.37”x0.47” (SIP8)	EC5SAW
0.95”x0.54x0.39 (DIP16)	EC5DAW/4DAW
1.25”x0.80”x0.40” (DIP24)	EC2A/3A/3AE/3A-E/3AW/4A/4A-E/4AW EC4AW-H6/5A/6A/6AW/7A/8AW/7AW
1.25”x0.80”x0.50” (DIP24)	EC3AB/4AB/6AW-110/7AW18
1”x1” (DIP)	EC2SB/2SBW/3SB/3SBW/4SBW/5SBW/2SBW-H
2”x1” (DIP)	EC3B/3BB/4BE/4BW/4BU/5BE/5BW/5BU/7B/7BW EC7BW-110/9BW/7BW18
2.05”x1.2” (DIP)	ECLB40W/40W-110/60/60W/75W/ECB40W18
2”x1.6” (DIP)	EC1SC/3SCW
2”x2” (DIP)	EC3C/3CB/5C/6C/7C
2.56”x3” (DIP)	EC6E
0.54”x0.36”x0.29” (SMD)	EC1SA0XNS/1XNS Single
0.64”x0.36”x0.29” (SMD)	EC1SA0XNS/1XNS Dual
1.00”x1.00”x0.36” (SMD)	EC2SBXX-XXS/EC3SBXX-XXS
1.25”x0.80”x0.45” (SMD24) 1.25”x0.80”x0.41” (SMD24)	EC2A/3A/3AE//3AW/4A//4AW/5A/6A/6AW/7AXX(MS/HMS) EC3A-E/EC4A-E(S/HS/MS/HMS)
1.25”x0.80”x0.55” (SMD24)	EC3AB/4ABXX(MS/HMS)
4.45”x2.33” (Enclosed Chassis Mount/DIN Rail)	EC7BW18-72 ECRT/EDRT
4.00”x2.14” (Enclosed Chassis Mount/DIN Rail)	EC7AW18-72 ECRT/EDRT
5.63”x2.56” (Enclosed Chassis Mount/DIN Rail)	ECB40W18 ECRT/EDRT
3.04”x1.48” (Chassis Mount/DIN Rail)	EC5SBW C(D)MF
0.48”x0.34”x0.69” (SIP3)	NCS01W8

2. Package SIP 4

2-1. 0.46x0.24x0.40 Inch

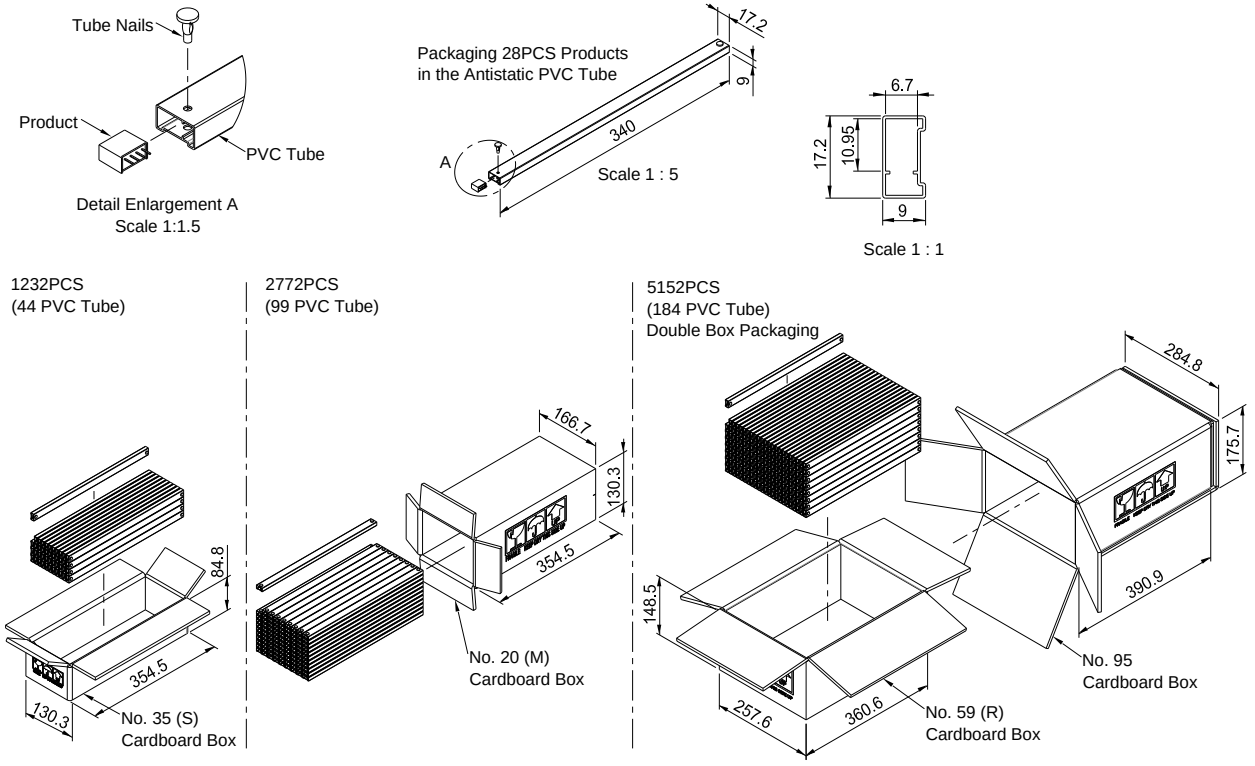

2-2. 0.46x0.30x0.40 Inch

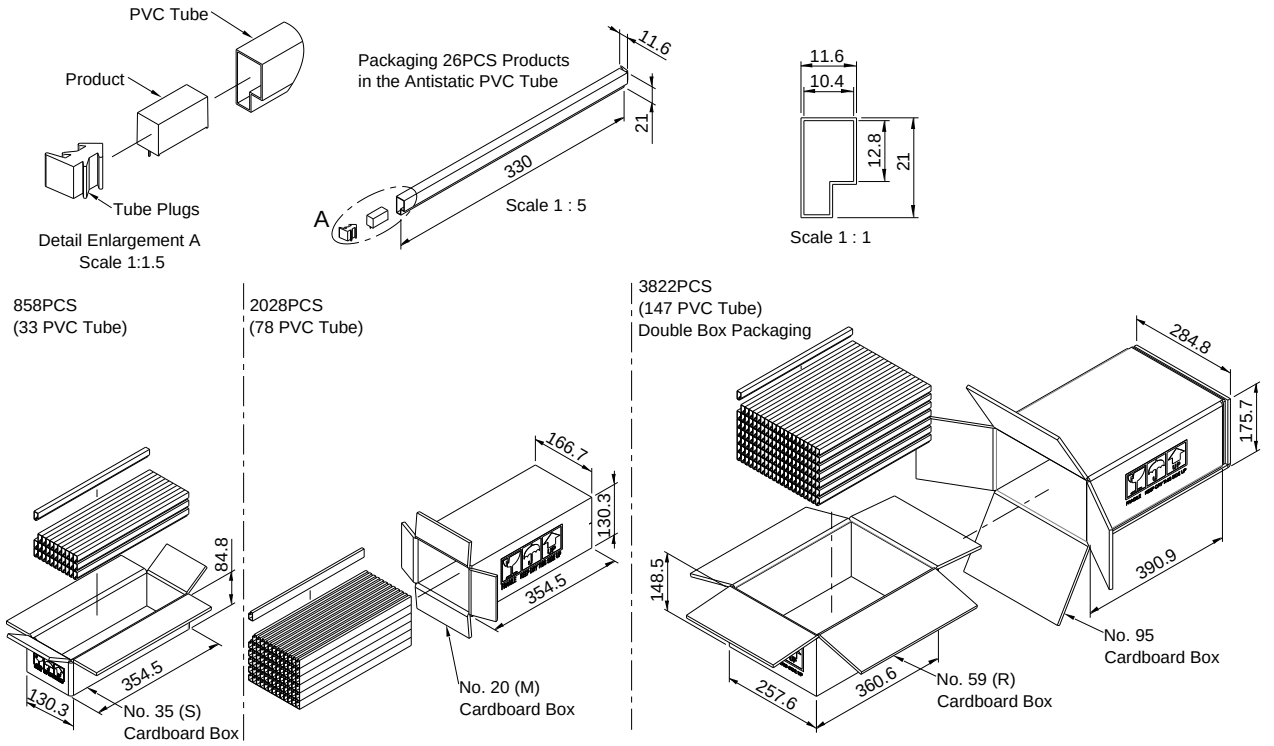

3. Package SIP7

3-1. 0.77x0.24x0.40 Inch

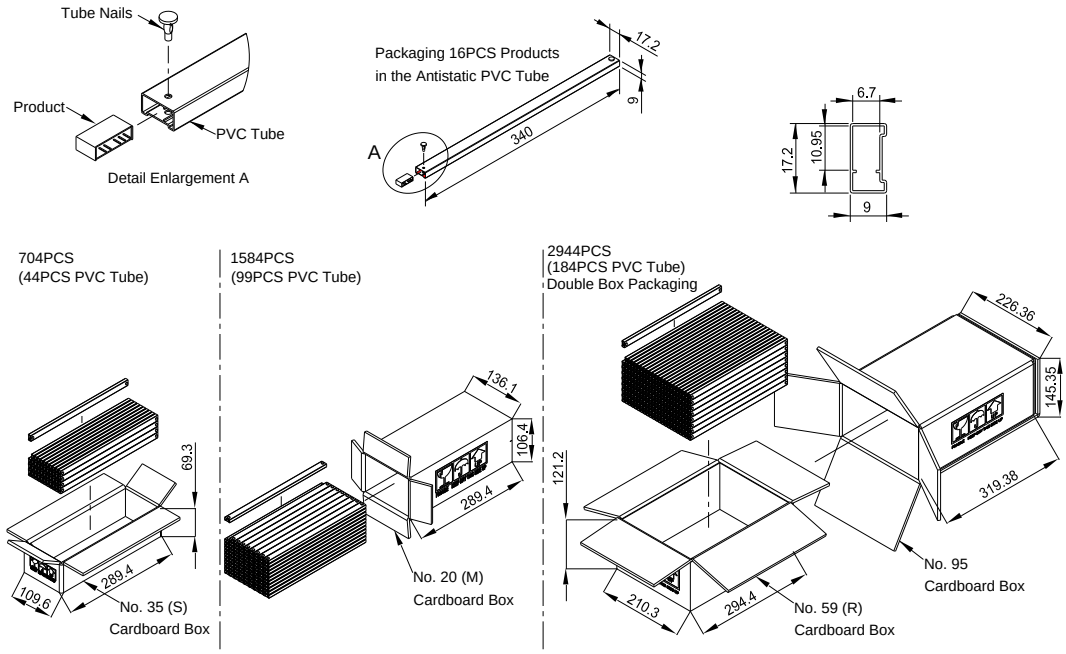

3-2. 0.77x0.28x0.40 Inch

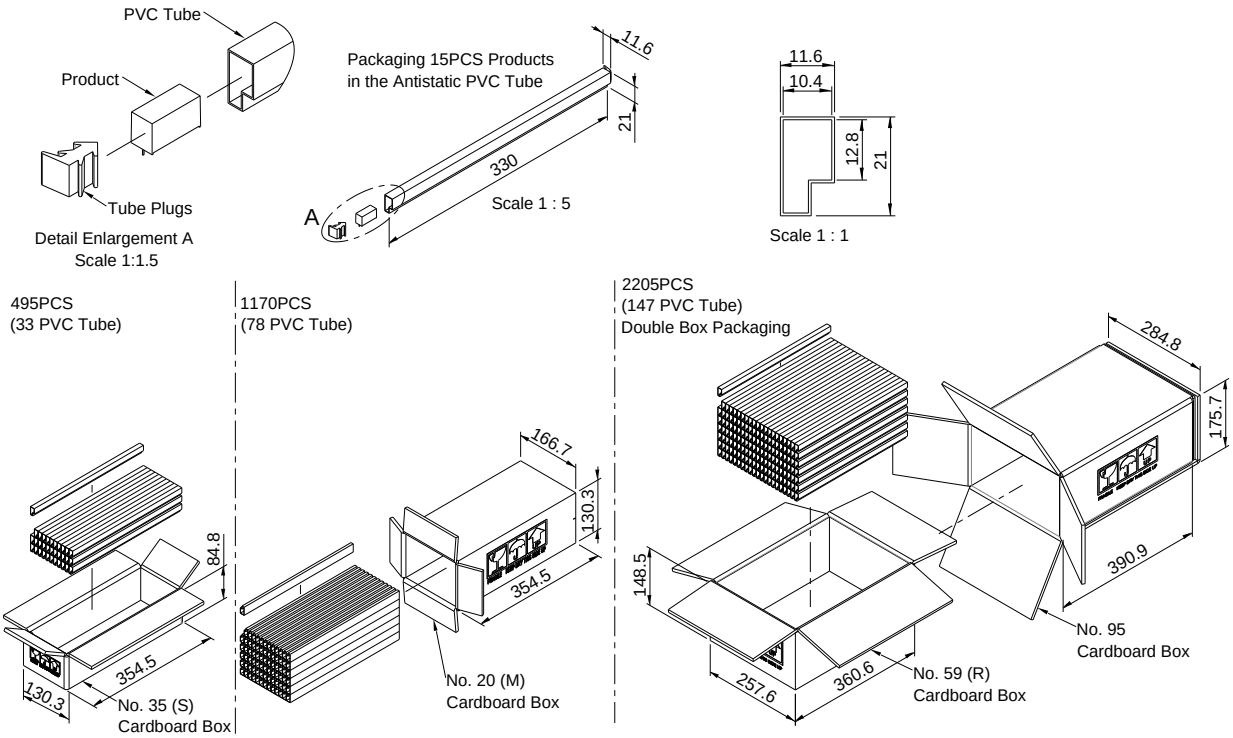

4. Package SIP8

0.86x0.36x0.44 & 0.87x0.37x0.47 Inch

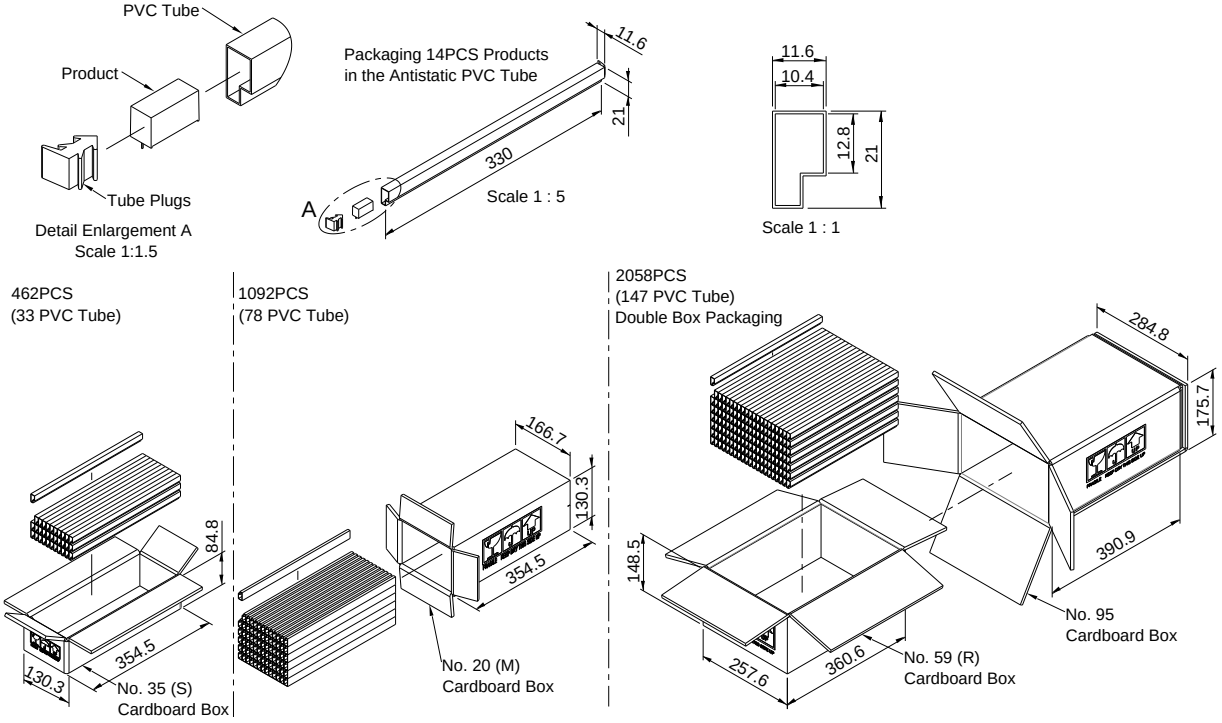

5. Package DIP16

5-1. 0.95x0.54x0.39 Inch

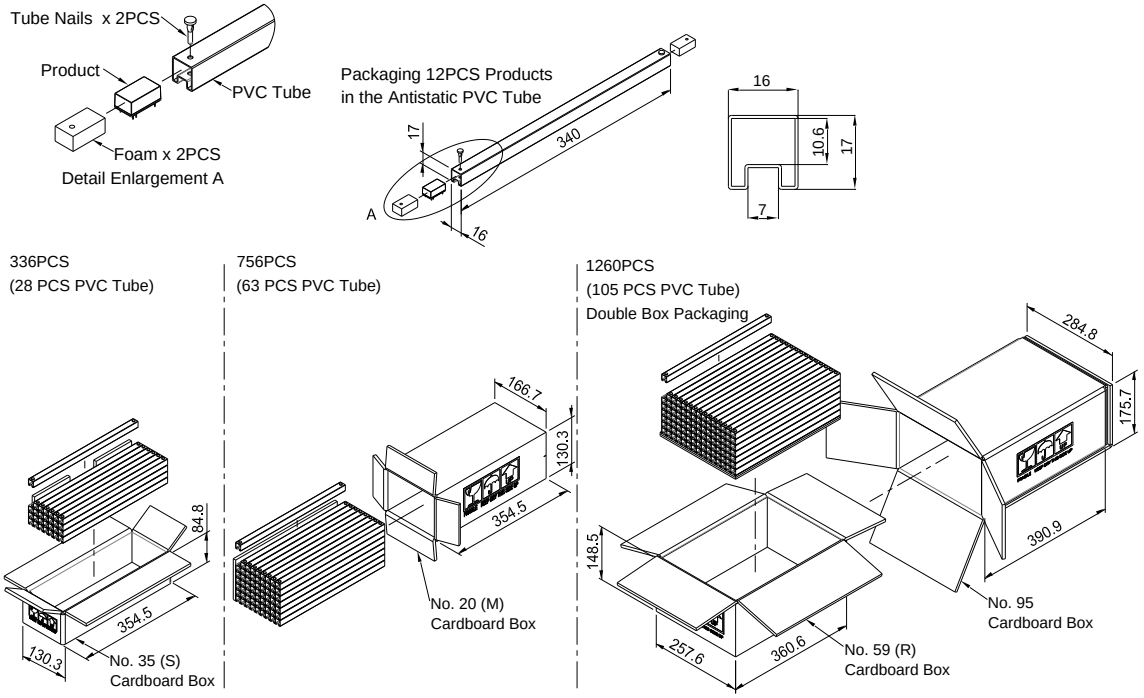

6. Package DIP24

6-1. 1.25x0.80x0.40 Inch

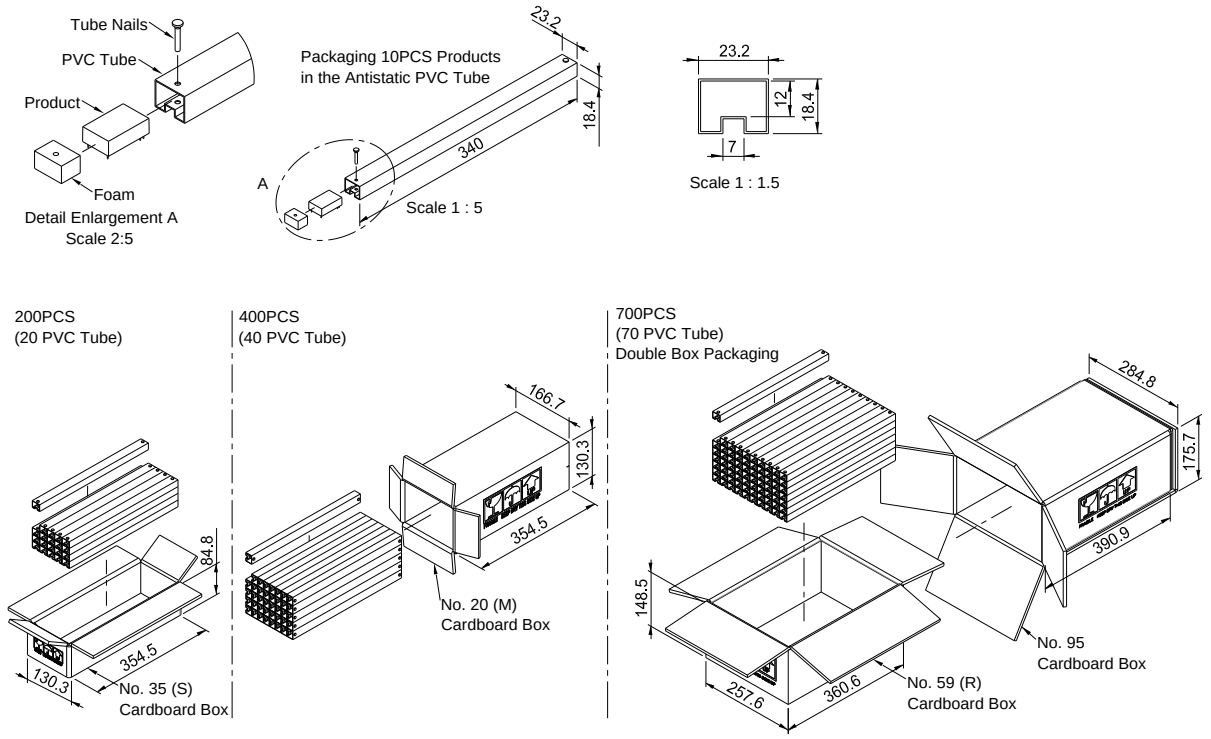

6-2. 1.25x0.80x0.50 Inch

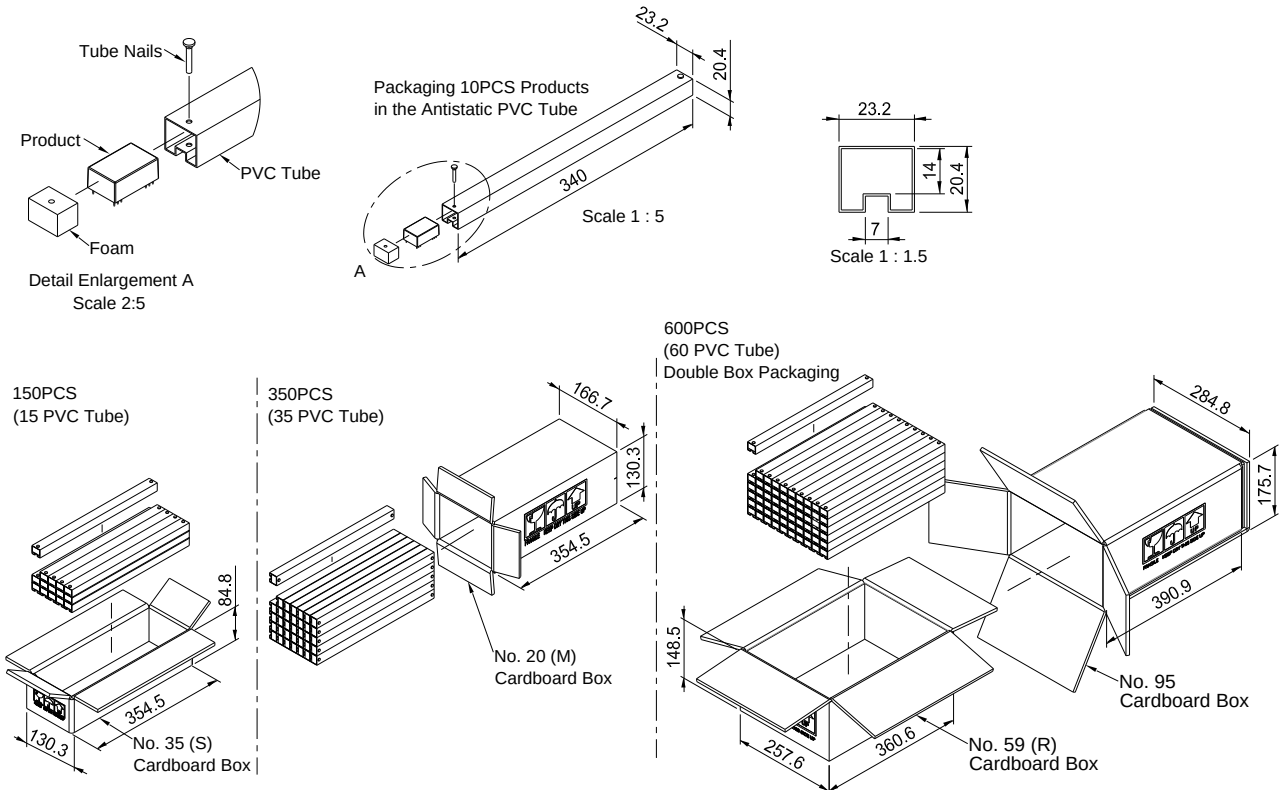

7. Package 1˝x1˝

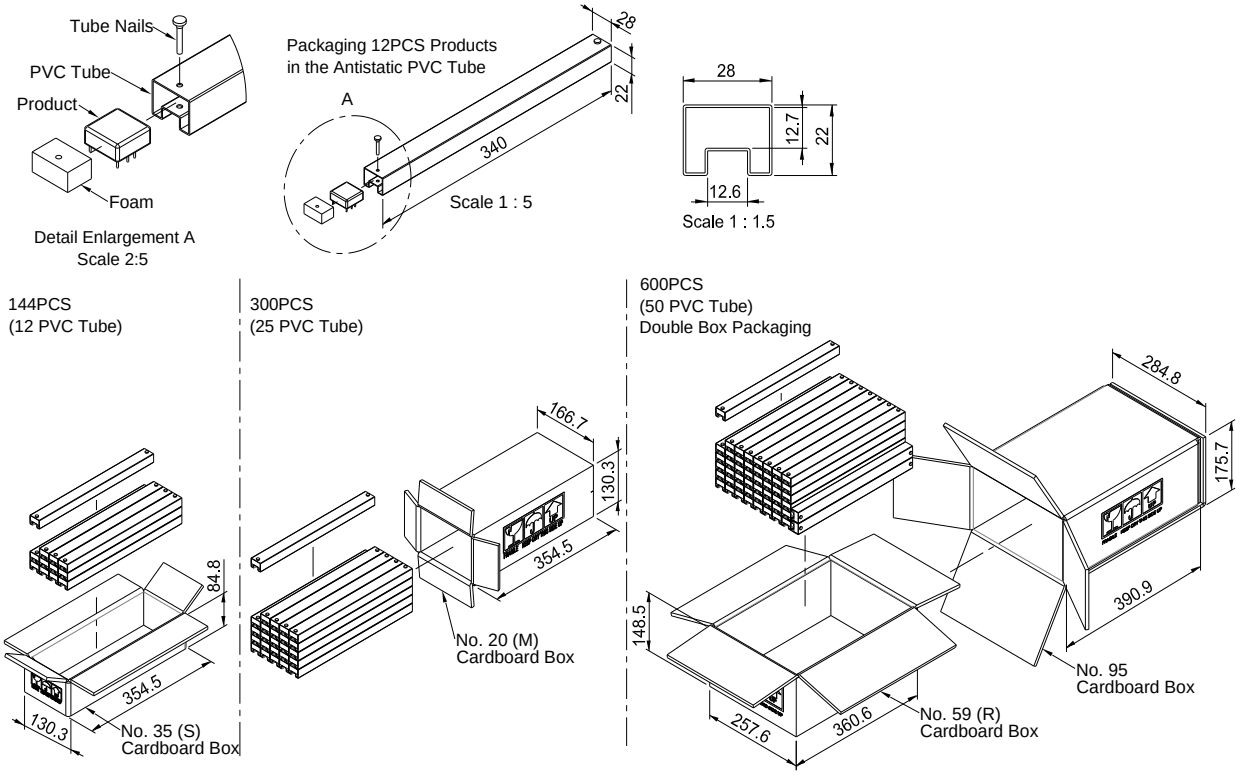

8. Package 2˝x1˝

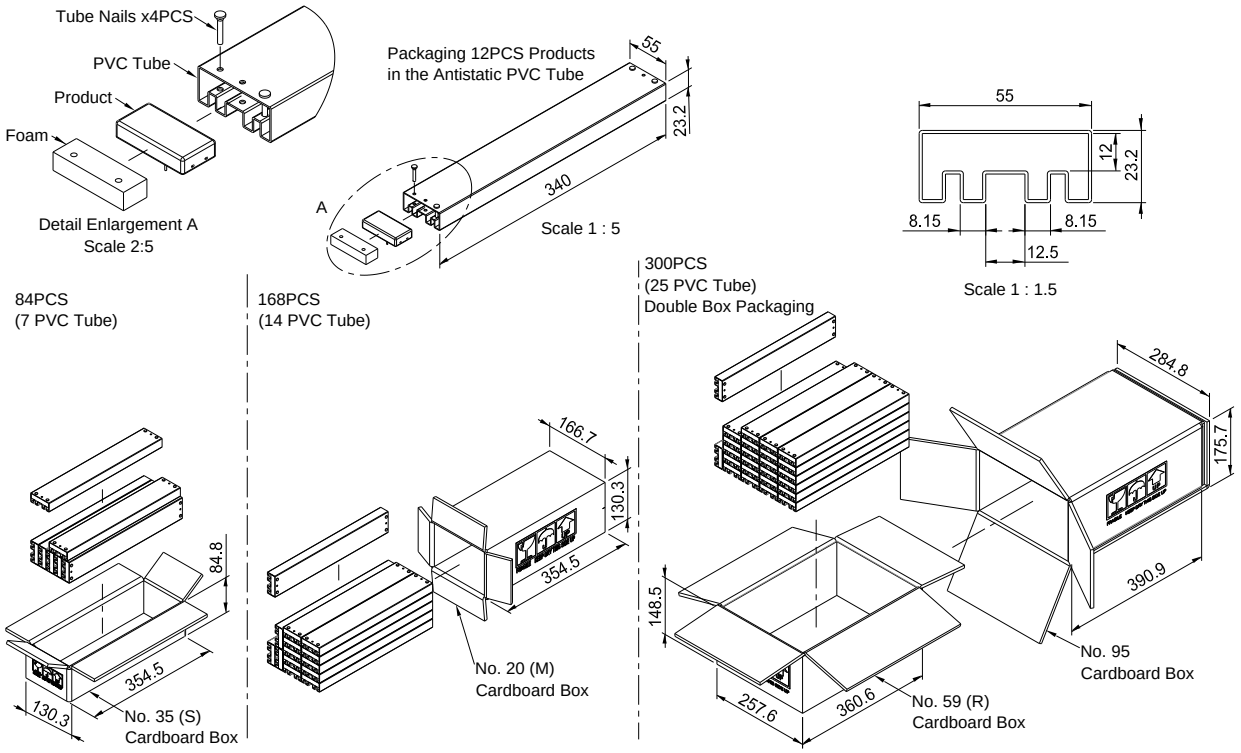

9. Package 2.05″x1.2″

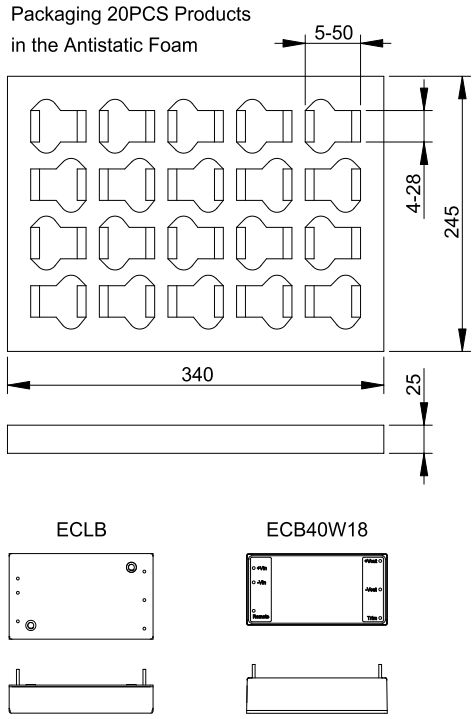

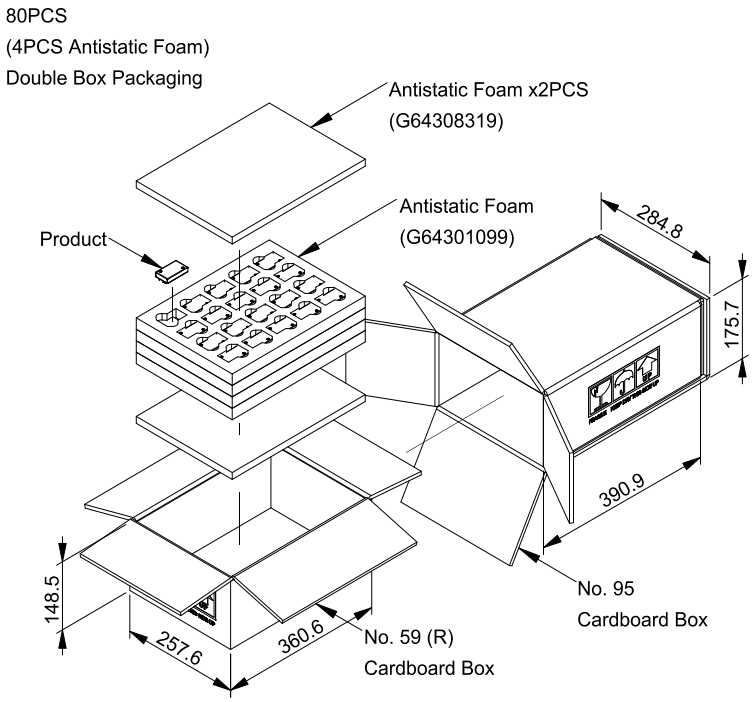

10. Package 2″x1.6″

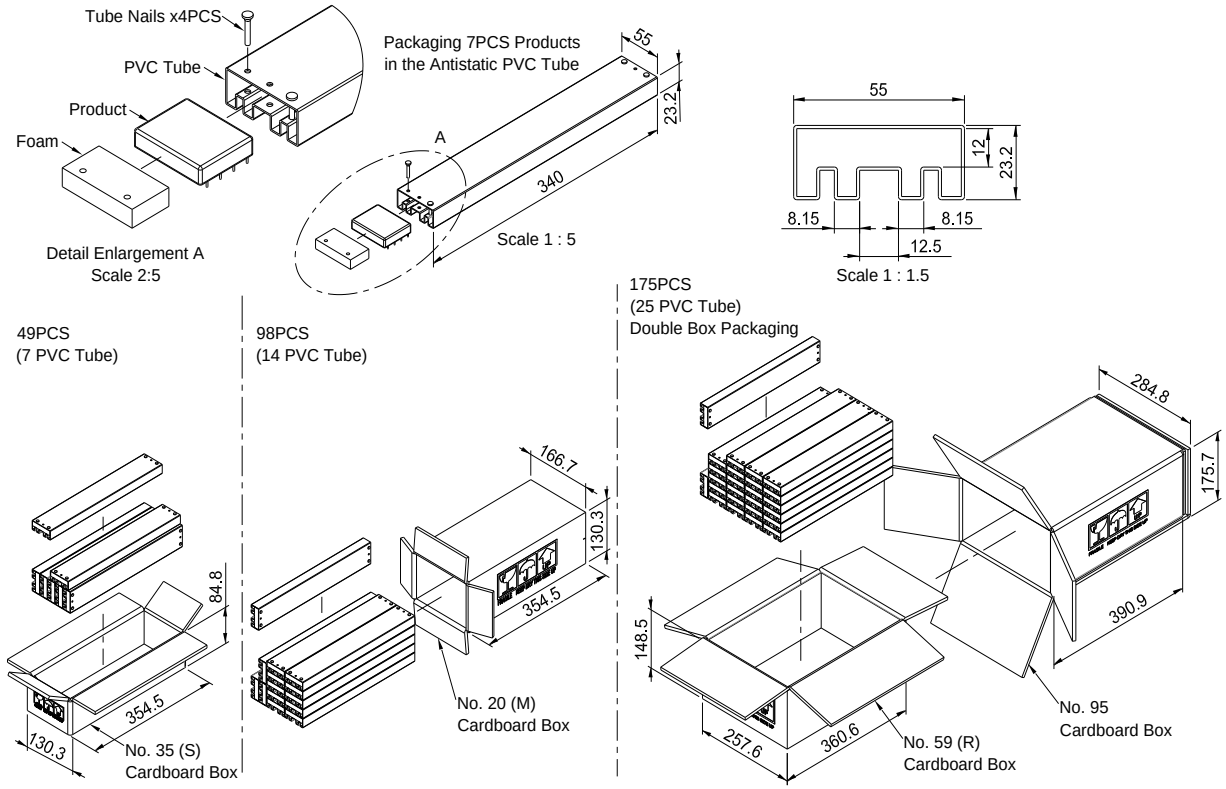

11. Package 2″x2″

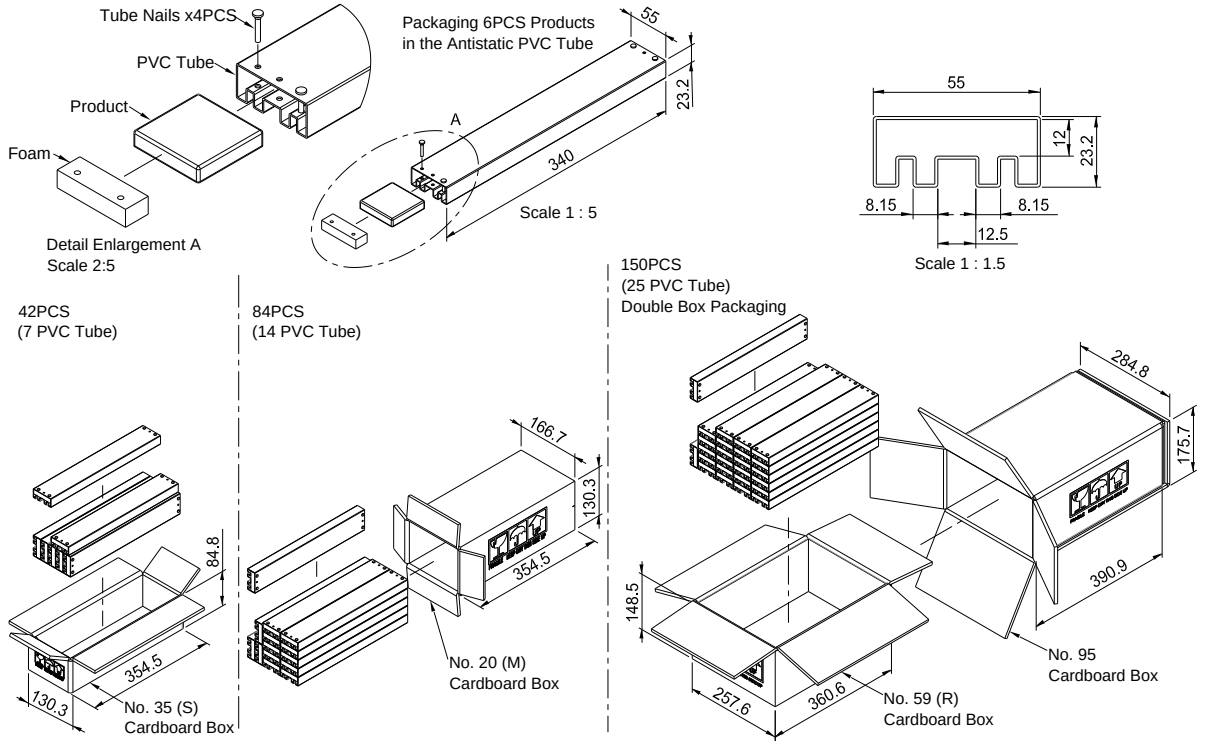

12. Package 2.56″x3″

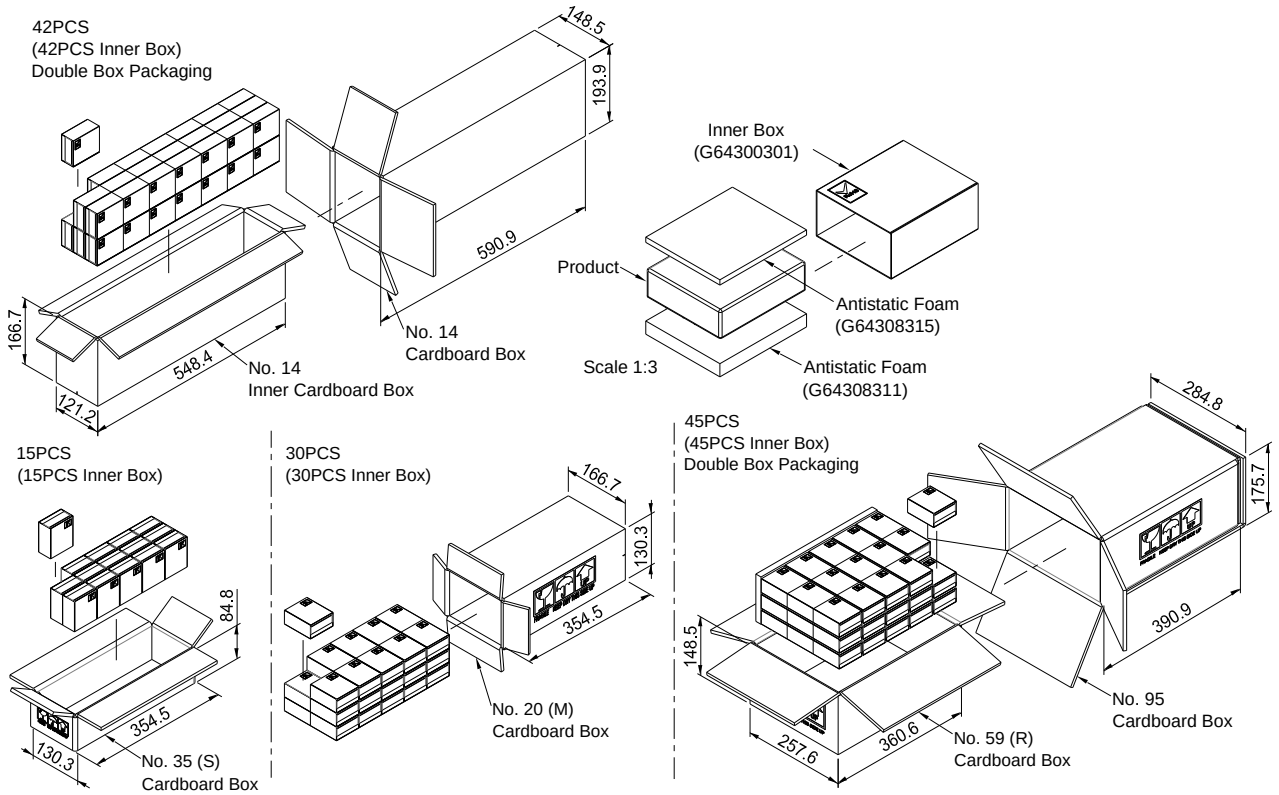

13. Package SMD

13-1. 0.54x0.36x0.29 Inch

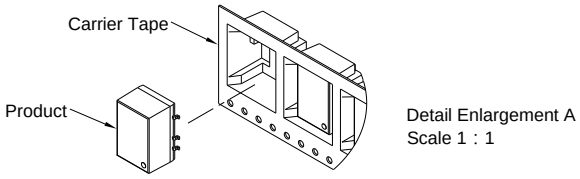

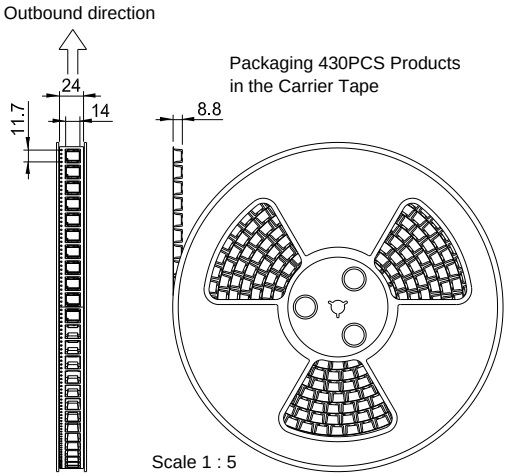

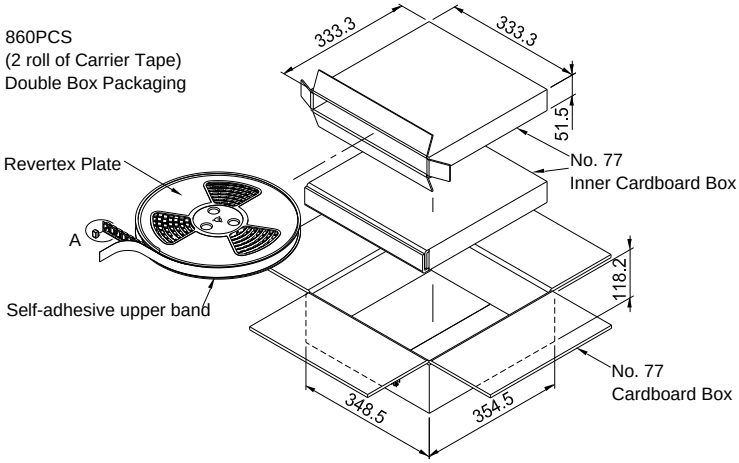

13-2. 0.64x0.36x0.29 Inch

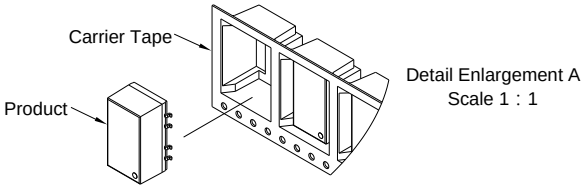

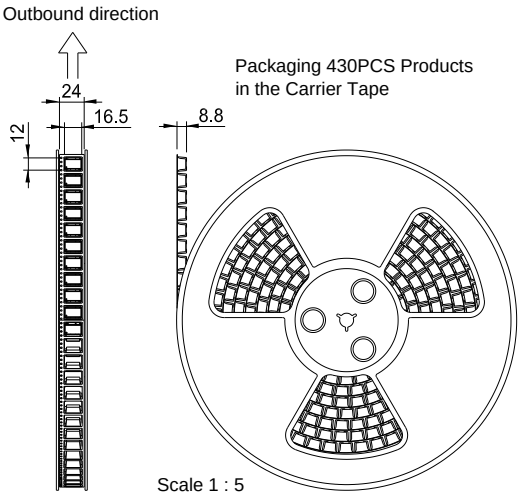

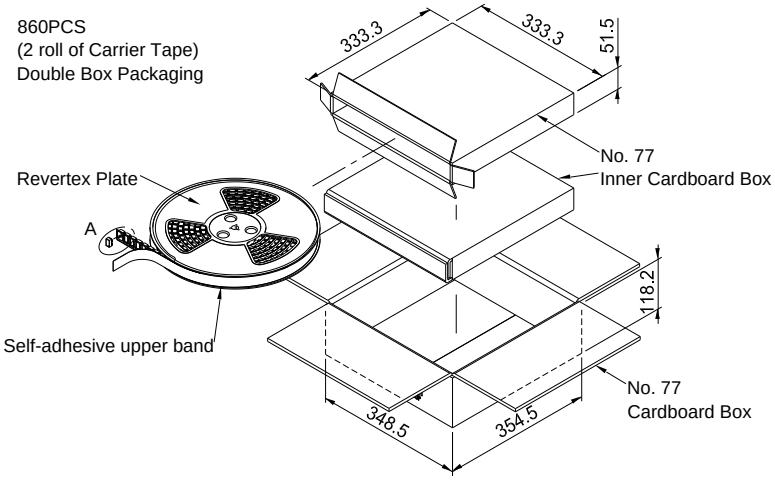

13-3. 1.00x1.00x0.36 Inch

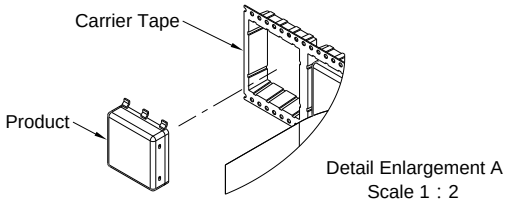

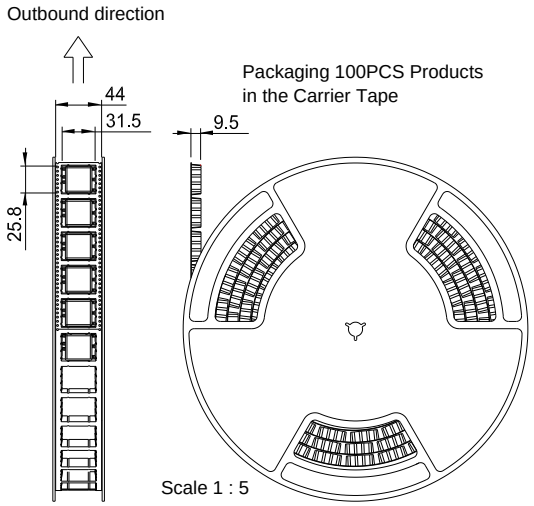

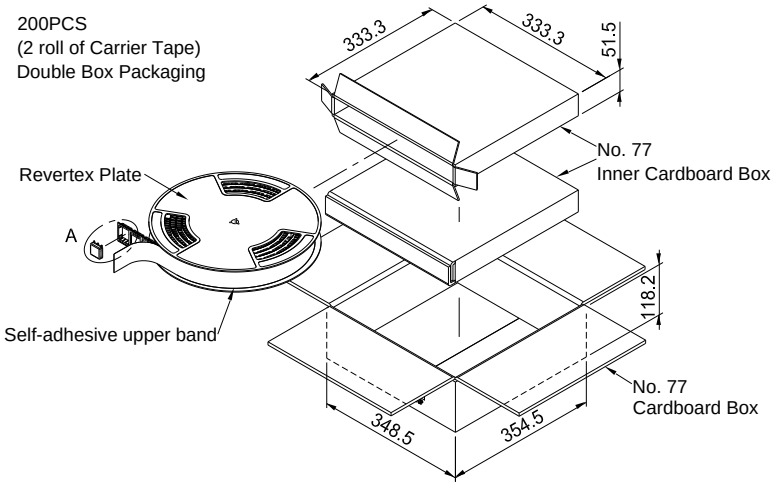

14. Package SMD24

14-1. 1.25x0.80x0.45 & 1.25x0.80x0.41 Inch

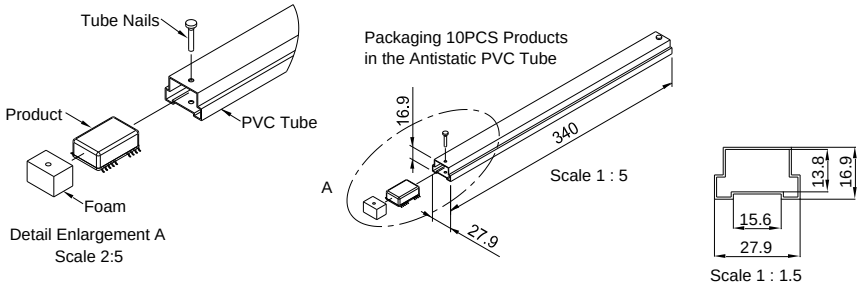

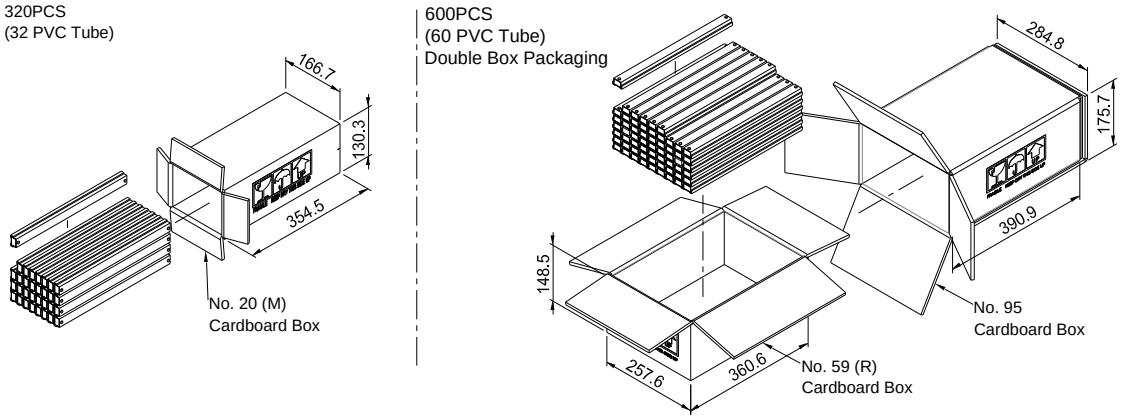

LOW POWER 1-75W
DC-DC CONVERTER
Packaging Information

14-2. 1.25x0.80x0.55 Inch

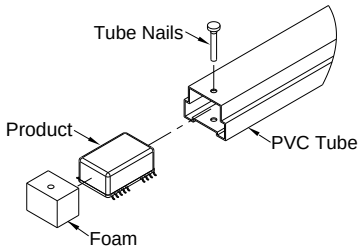

Detail Enlargement A
Scale 2:5

Packaging 10PCS Products
in the Antistatic PVC Tube

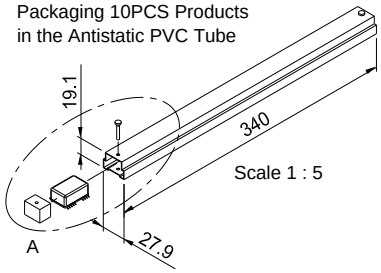

Scale 1 : 5

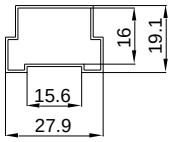

Scale 1 : 1.5

320PCS
(32 PVC Tube)

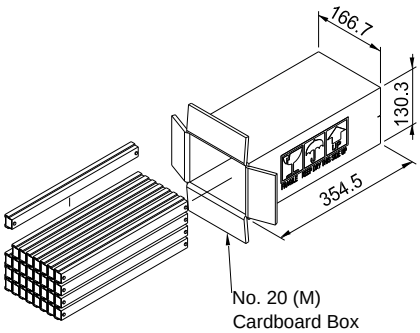

600PCS
(60 PVC Tube)
Double Box Packaging

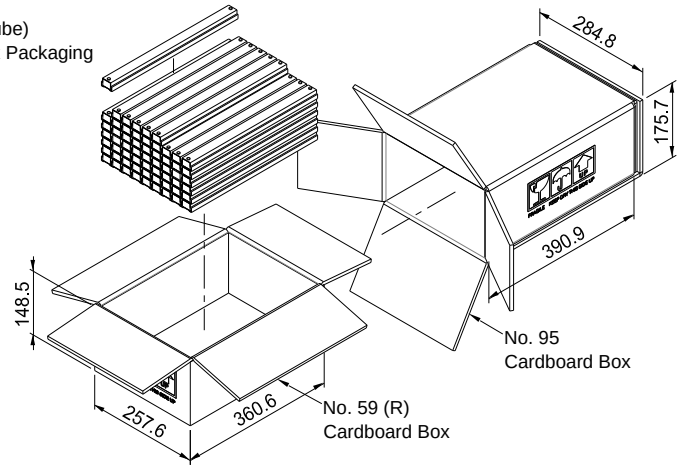

15. Package Enclosed Chassis Mount/DIN Rail

15-1. 4.45x2.33x0.85 & 4.45x2.33x1.43 Inch

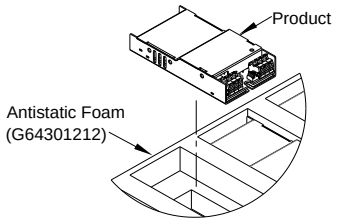

Detail Enlargement A

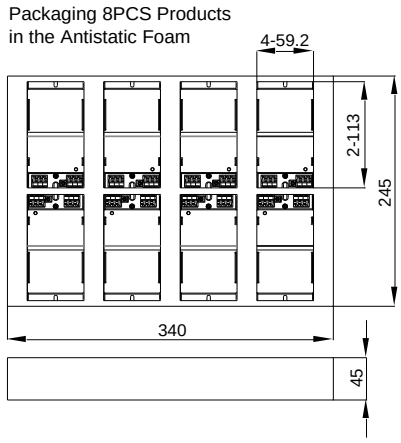

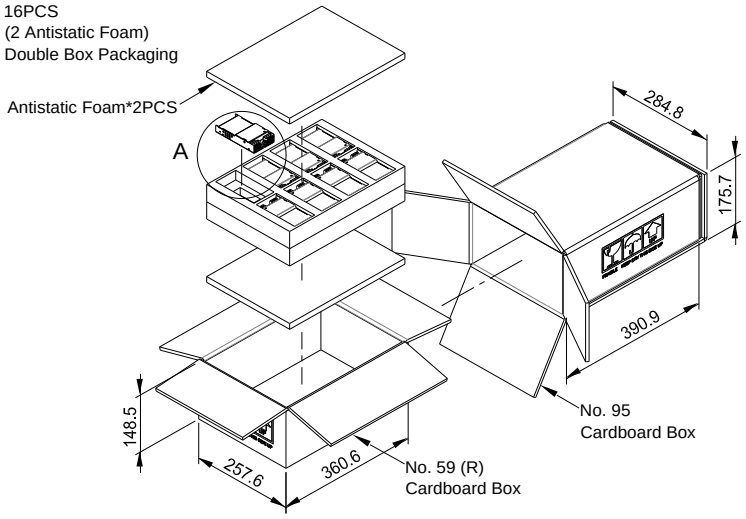

15-2. 4.00x2.14x0.80 & 4.00x2.14x1.38 Inch

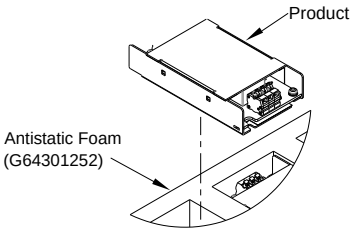

Detail Enlargement A

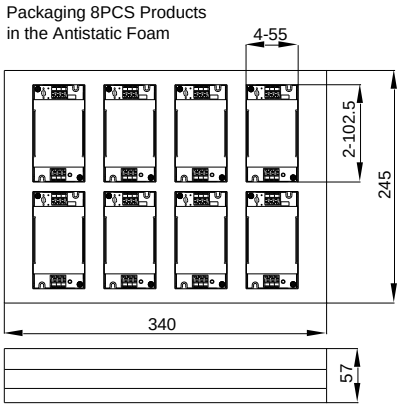

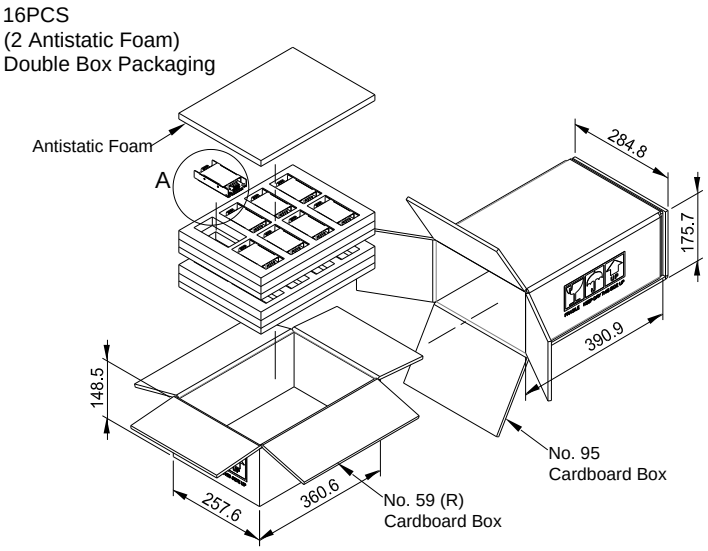

15-3. 5.63x2.56x0.87 & 5.63x2.56x1.54 Inch

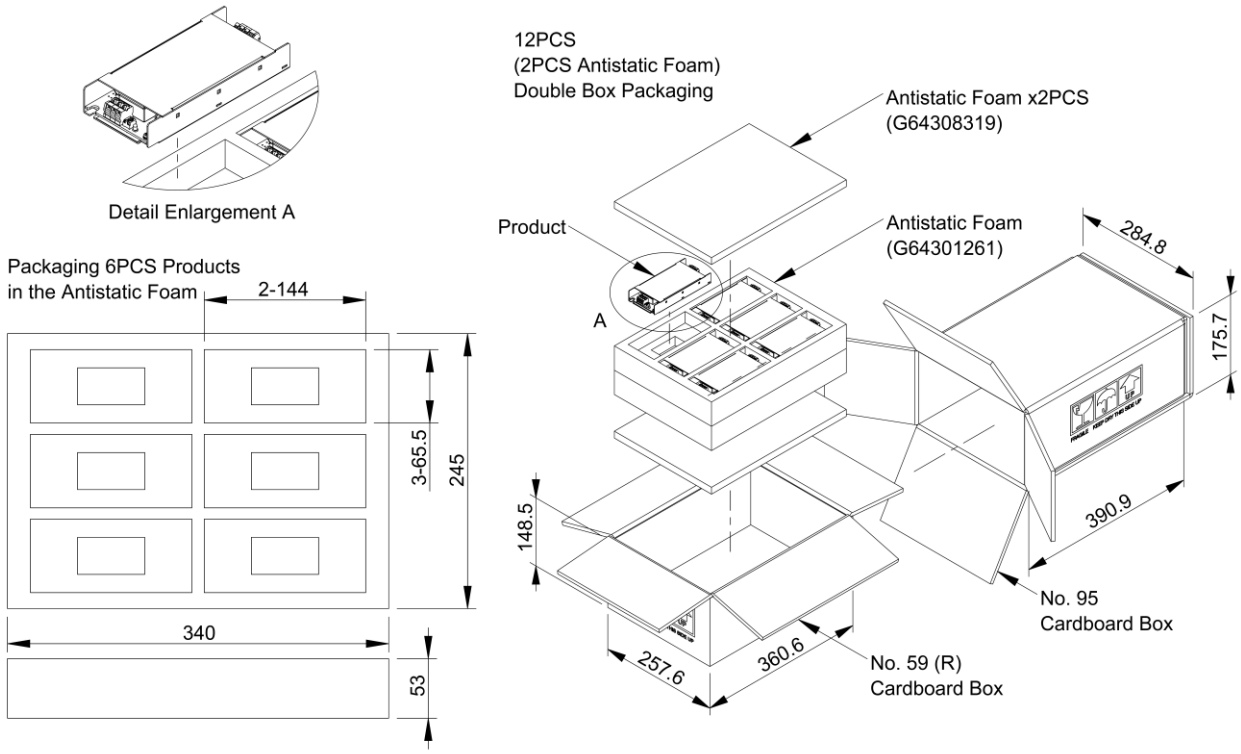

15-4. 5.63x2.56x1.42 & 5.63x2.56x2.05 Inch

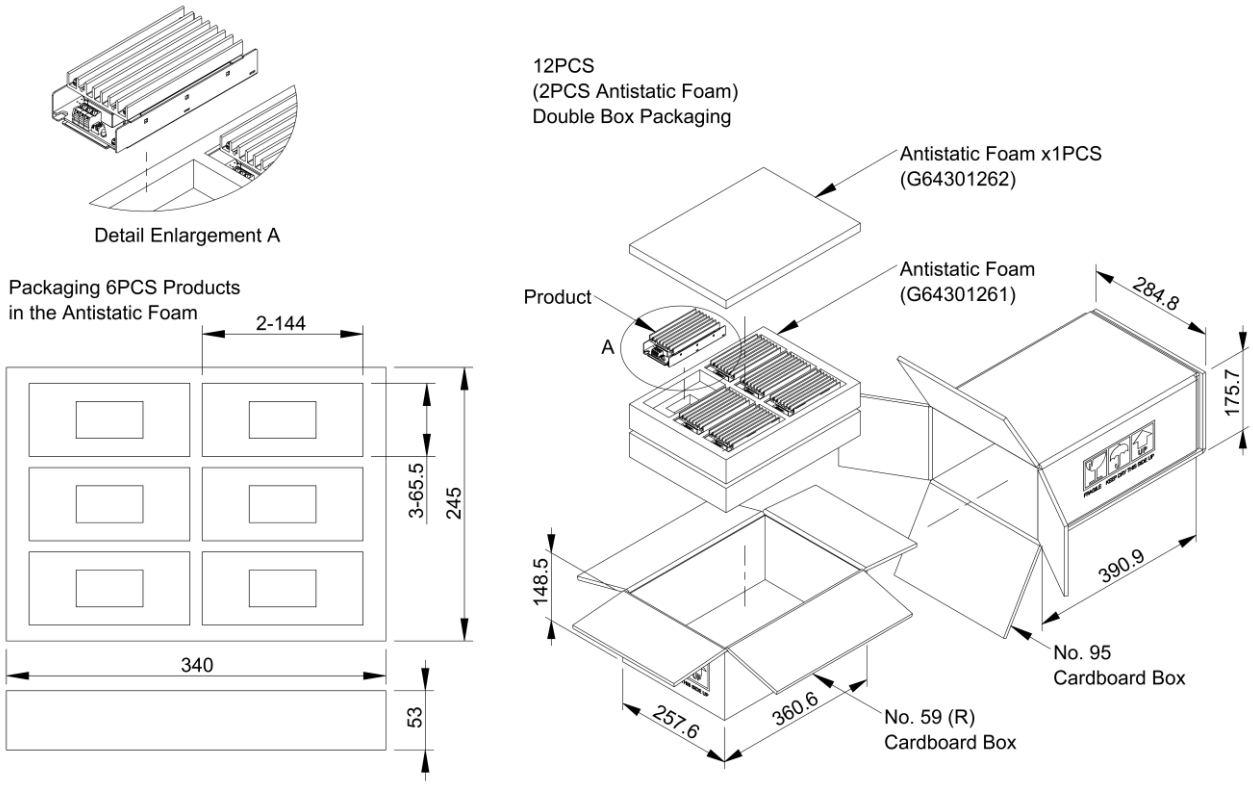

16. Package Chassis Mount/DIN Rail

3.04x1.48x1.20 & 3.04x1.48x1.71 Inch

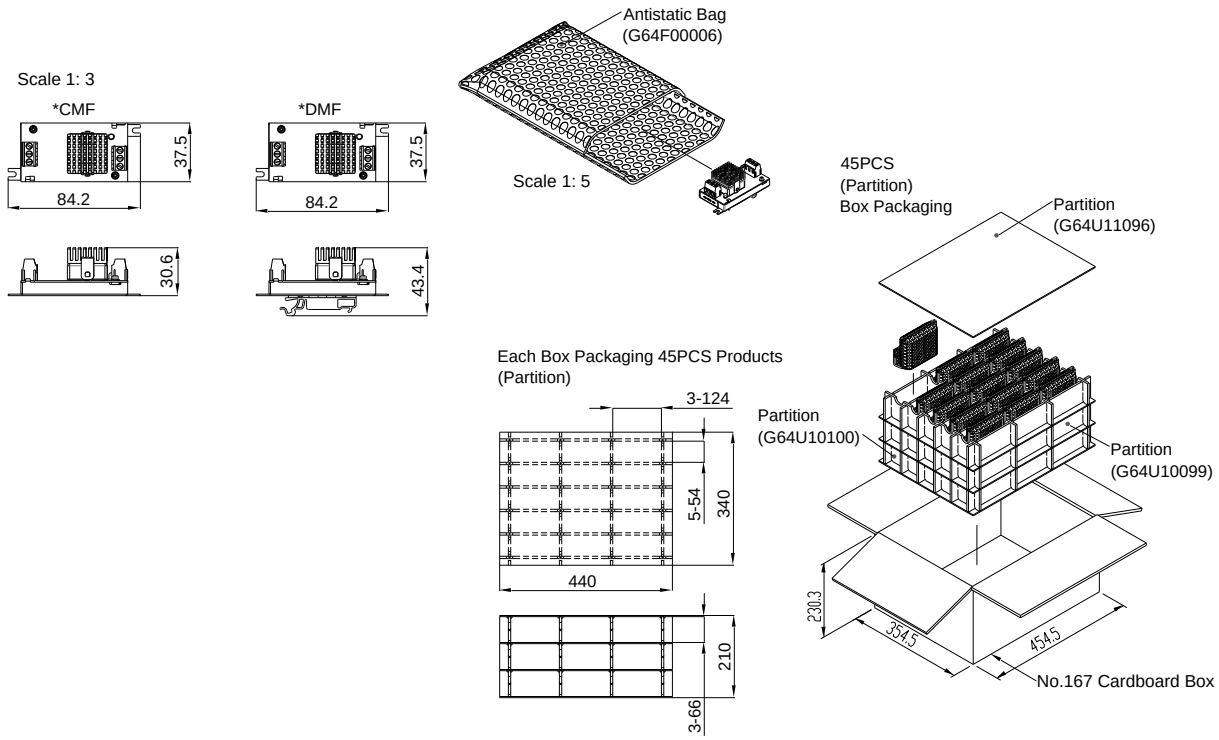

17. Package SIP3
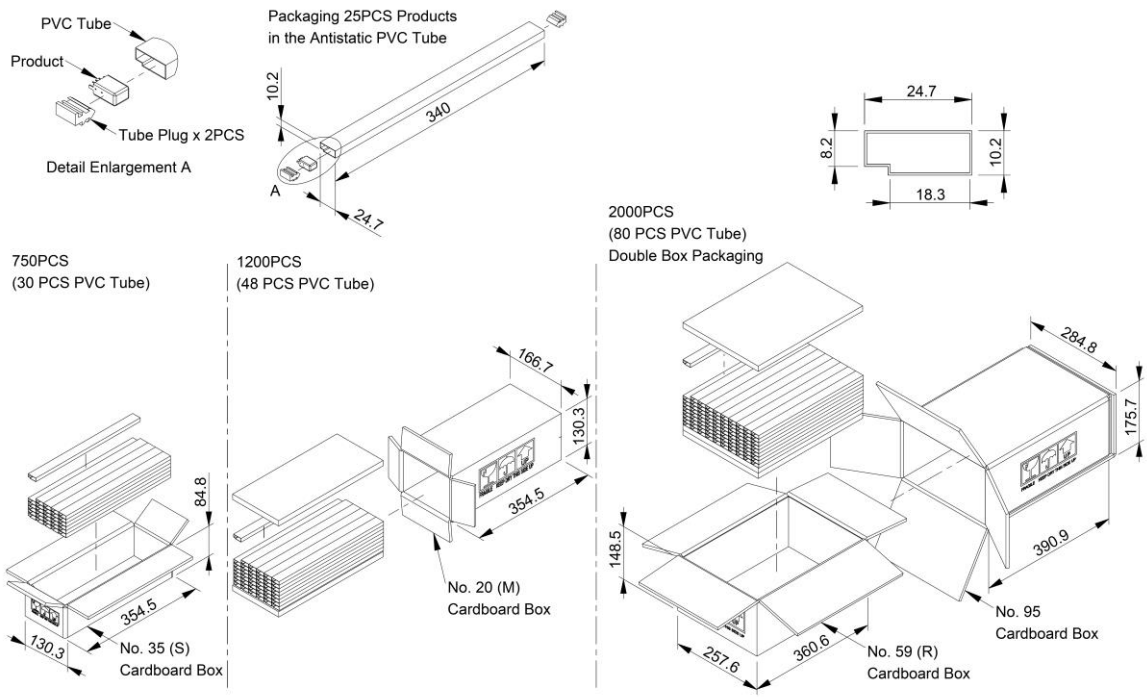
17-1. 0.48x0.34x0.69 Inch